Lady Kite Flier's Arch

These directions for the new kitemaker. If you are experienced, skim the directions and look at the diagrams. This kite is bound not hemmed.

Sails: Suggested Fabric is 3/4 oz. nylon. Some sources of nylon are: Texlon or Kite Studio (kite-builder.com).

The diagram to the right shows the finished size of the kite. You can make your kite pattern to these dimensions. Suggested pattern materials - tag board, poster board, or even make a metal pattern.

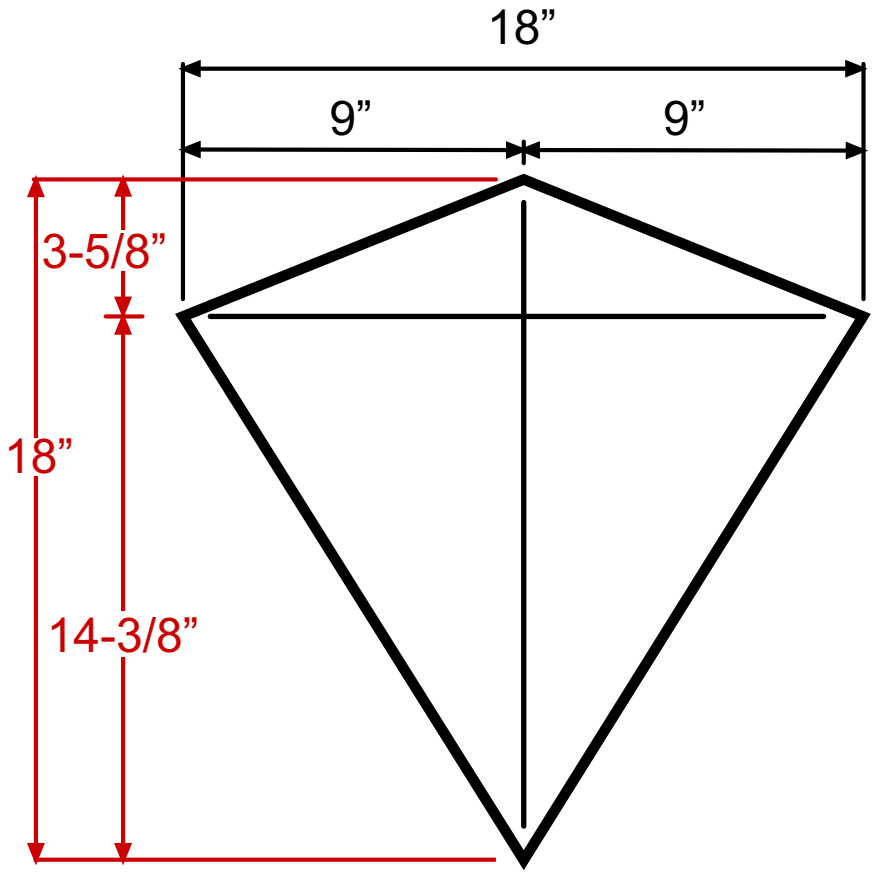

You will be binding the edges instead of folding the edges for a hem.

You can applique, paint, or whatever on the front of your kite. There will be sewing across the widest part to hold the line on.

Some suggestions are: raspberry with the black and white Lady Kite Flier's logo, spell out your name with a letter on each kite, spell out Lady Kite Fliers, or add your own unique items.

After decorating the sails next:

Cut (preferably hot cut) 3/4 inch strips of 3/4 oz. nylon (black makes a nice frame, but you can choose your own colour) for the edge binding. Fold them in half and crease them to give a 3/8 inch wide border on the sails. Sew using a straight stitch, zig-zag or 3-step zig-zag stitch.

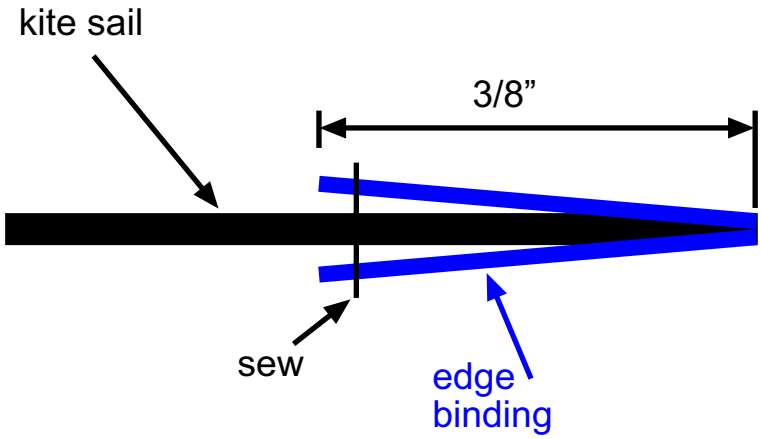

Trim the excess binding off with scissors on the side where you will sew the next piece onto the kite. Cut off the over hanging pieces with a hot knife if one is available or otherwise use scissors.

Tail

You have your choice about tails. You can either make

- ripstop tails and sew them on (as shown below) or
- you can make tails out of surveyor’s tape and larks head them over the spines.

Cut a strip of 3/4oz nylon 1-1/2 inches wide and 41 inches long for each kite. You can make your tails a different colour for each kite, use the same colour for each kite, or make a colour coordinated tail scheme.

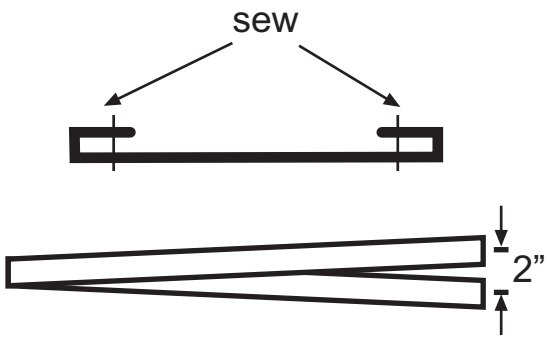

Make a single fold hem on all four sides. Sew the fold with a straight or zig-zag stitch. The width of the tail after hemming should be about 1 inch wide. Fold it at the center so it is a little crooked as shown at the right. When the tail is folded over, there should be about 2 inches between the centres of the tail strips. This is done to make the tail do its job better. If the tail was folded exactly over, the tail pieces would tend to stick together, making the tail less effective.

Spar Pockets and Assembly

Hot cut (yes for dacron it is best you hot cut) 2 spar pockets from a 3/4 inch wide piece of 4 oz. dacron. Most dacron comes in black, but natural (white) and colours are available. If you don't have dacron, fold up 3/4 oz. nylon three (3) layers thick for pocket material. You can use 1-1/2 oz. or heavier nylon for pocket material, I'd recommend folding the 1-1/2 oz. nylon into two layers to make the pockets.

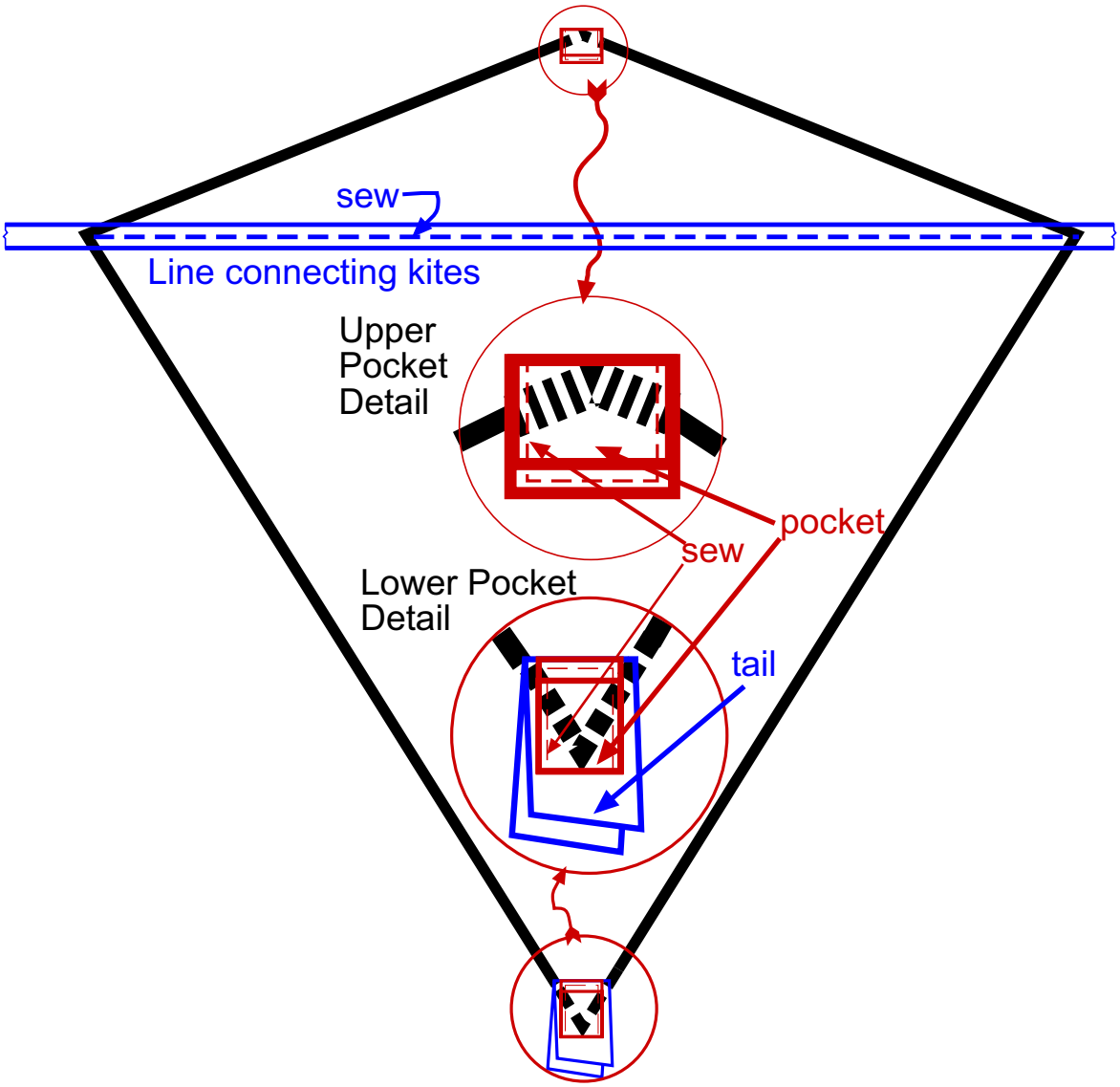

The pockets are created by folding the pieces lengthwise - and not quite in the middle. Sew the pieces onto the kite. See page 3 for a diagram of pocket placement.

Top pocket. Position the folded piece over the top point of the kite, centering the pocket on the center lengthwise fold of the kite. Yes, some of the pocket will hang over the edge of the kite, that is okay. Orient with the flap towards the center. Sew with a straight stitch from a top corner of the kite (most people will start at the top left-hand corner of the pocket) and sew down to flap. You will start sewing on 2 layers of dacron (and the kite) and keep sewing till you reach the lower left hand corner of the pocket, ending up on 1 layer of dacron. Turn, sew towards the lower right-hand corner (this whole side is only on one layer of dacron and the kite). Turn, sew back up the upper right-hand corner, going from one layer of dacron to two layers of dacron. Do not sew on the creased side of the pocket.

Bottom pocket. If you are larks heading the tails on, ignore the portion about position the tail on before sewing. If you are sewing the tail on, position the tail between the kite and the lower pocket. Try to not have the tail fold stick up beyond the pocket much (you still want to sew the tail when you sew across the pocket). Again, center the pocket on the lengthwise fold of the kite. Make sure the crease touches the bottom of the kite. The crease of the pocket should be at the bottom of the kite while the fold of the tail should above the opening of the pocket. Start sewing at the bottom right-hand of the pocket next to the pocket crease. You should be sewing through 2 layers of dacron. Sew towards the upper right-hand corner. You should end up on one layer of dacron. Turn the kite, sew along the pocket edge to the upper left-hand corner, sewing through only one layer of dacron. Turn the kite, sew along the pocket edge to the lower left-hand corner. You will start sewing on one layer of dacron and end up on two layers of dacron. You will be sewing through the tail while you are sewing on the pocket. Do not sew along the crease of the pocket.

Congratulations, you have put the pockets on your kite.

Joining the kites together for an arch.

48 strand flat braid (can be bought at a commercial fisherman's supply store - although it is called a 48 strand flat braided twine there - I buy mine at a store called Englanders in Westport WA) or 250 lb. or 500 lb. braided dacron (because it is easier to sew than smaller braided dacrons).

I find it easiest to lay the kites in order. Place the leftmost kite face down. Stack the rest of the kites in order from the left face down on top of this kite. The kite on the top of the stack is the kite that will fly on the rightmost side (as you look at the arch flying in the wind). I take a piece of masking tape to mark the distance from one kite edge to the next one on the front of my sewing table or on a ruler (then I don't have to think hard while I'm sewing).

Leave 3 foot of braid at the end before you start to sew on your first kite. Again, I use a braid foot (it has a tunnel in the bottom but a satin stitch foot can work) to sew the braid. There are different theories about whether you should you straight stitch, zig-zag, or a three-step zig-zag to sew the line onto the kite. My current theory is whatever works - I use straight stitch because it is faster to sew and uses less thread.

With that said, lay the first kite down wrong side up - top tip towards the inside of the sewing machine. See the diagram below. Thread or lay the line down (with the 3 foot leader). Start stitching with a backtack to hold the kite

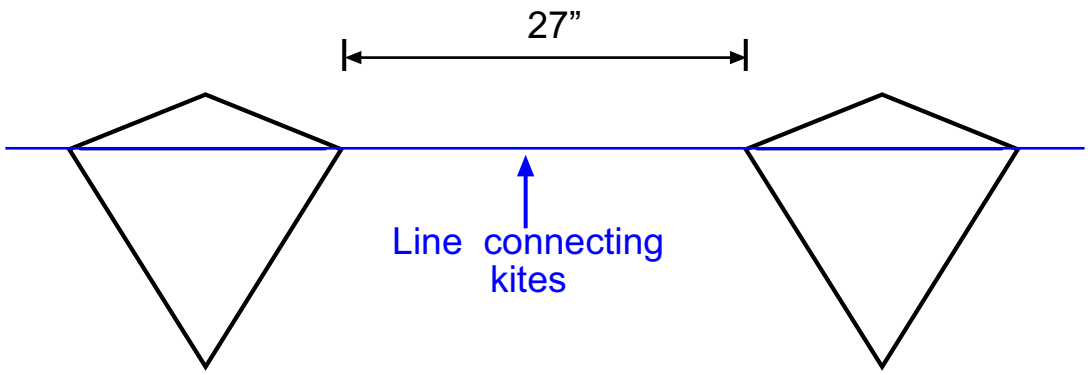

I backtack when I reach the end of each kite but I don’t cut the thread. I stop, hold out the line against my ruler to mark where the next kite will be sewn on. I sew down the line to the next mark, lay the next kite under the line. Sew onto the kite, backtack, sew the kite, backtack at the other edge of the kite. Mark, sew, and keep doing this until you have sewn on the last kite. At the last kite, do your backtack and cut the thread. DO NOT CUT the line yet. Measure off about 3 feet on the line beyond the last kite and then cut the line.

On the end you started from (the left-hand side) - tie a large knot 27 inches away from the edge of the first kite. Cut off the excess on that side. On the right-hand side - make a loop so the tip of the loop is about 27 inches from the edge of the kites. Cut off the excess. You should either melt the ends or use fray-check to prevent the line ravelling away.

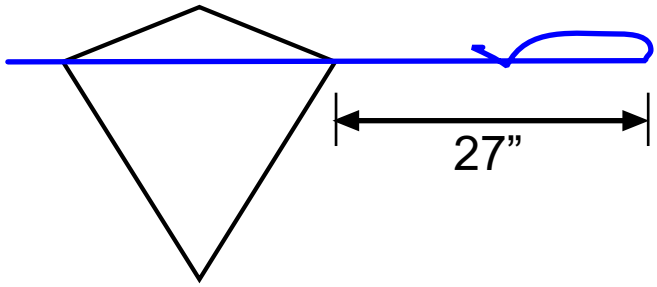

Spines - 3/16” dowels.

Cut 3/16 dowels to fit in the pockets of each kite. You don’t want the spines so tight you see wrinkles in the front, stretch marks, or a bowed spine. You don’t want the spines so loose they will fall out or the kite sags. You may need to bend the spines a little to get them in. I cut my spines with a saw and sand the ends so the cut edges are not sharp.

If you are larks-heading tails on, now is the time to do that.

Storing the kites

If you are making an arch under 50 kites, it is easier to take a 2 to 4 inch wide piece of velcro about a foot long. From a piece of the opposite Velcro make a patch about 2 inches long by the width. Sew the patch on the wrong side of the foot long piece at one end. If you want to avoid the sewing, find some two-sided heavy velcro- cut a piece about a foot long.

Hold the piece of velcro with the wrong side (and patch) in your hand Slide your hand and the velcro between the spines and the kites. Let the spines rest in your palm and velcro and kites against the back of your hand.

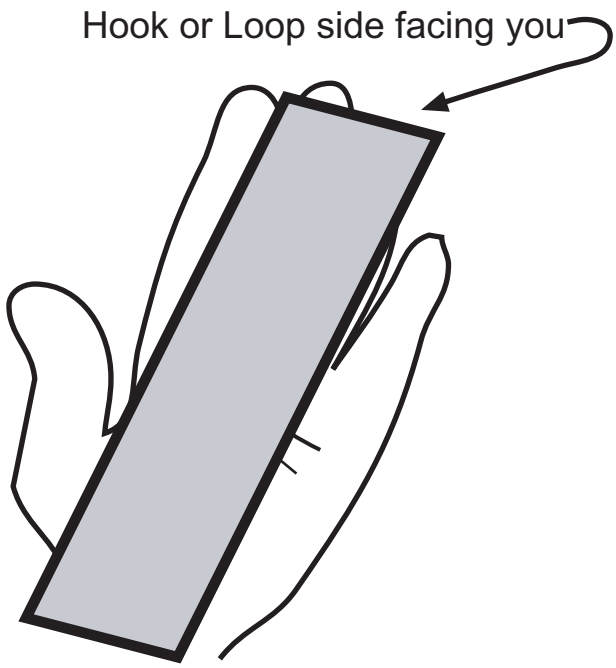

Once all of the kites from one end to the other are collected on your hand, close the velcro, encircling the spines with the velcro.

You can make a bag for your kites, to keep them clean and tidy. I make my bag about 24 inches long and 24 inches wide before sewing the side seam up. You can put drawstrings at both ends of the bag - it makes it easier to put the kites in the bag and retrieve the kites (Thanks to Rob Pratt for that idea).

If you make an arch with more than 50 kites (or combine multiple arches you don't plan on taking apart very often), making a kite winder out of pvc pipe, tees, and elbows works better. You will end up with something looking like a kid's marshmallow gun or a really strange pipe as shown in the diagram on the next page. (Thanks to Neal Parker for this idea.) The width is whatever you want, although a foot is a minimum. If you have a really long arch, you might want it longer, although it maybe more awkward to handle. Pick a length that is comfortable for you.

Hook one loop over the end. Put a hand on each stub and start turning. Wind your kites up on the winder similar to a line winder. Keep turning and turning keeping the spines of the arch between the two support brackets.

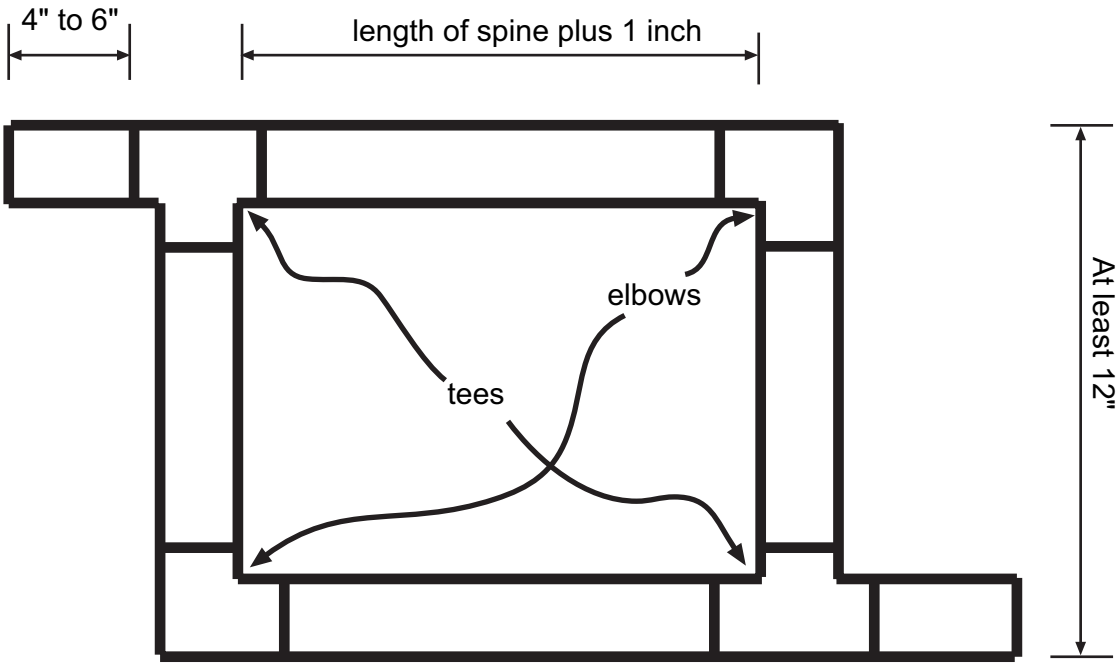

Flying your arch.

I like to use sand anchors for my arches (but then I fly at the beach). I make 2 cords (both the same length) from about 5 to 10 feet long. I put loops on both ends of the cords. I use these cords between my anchor and my arch. The ground winds are unsure and this also keeps small dogs and penguins (toddlers) from yanking on my kite tails.

I place both anchors at an approximate location. Once the arch is flying, I'll adjust it for the winds or the height of the arch I desire.

Wiggle your hand between the velcro and the kite skins (so the velcro and spines are in your hand). Attach the end you can find to the anchor cords. Let out each kite at a time, walking away from the anchor. Have the kite skin (the side without the line) facing the wind. It is usually easier to find the upwind end, attach to the anchor, and start moving downwind. Once you have reached the last kite in the arch, attach the end to the other anchor. Adjust the anchor for the wind.

If you are using the arch winder, attach the end to an anchor. Start walking so the kite skin is facing the wind. Keep unwinding and walking until all of the kites are out. Attach the remaining end to the anchor.

If the wind drops, your arch will drop to the beach. If the wind picks up, in most cases, the arch will fly itself again. Sometimes the wind changes direction or sand has blown on the kites. Go to

the center and lift some kites up. The arch will usually pick itself up after that. If the wind has shifted, you may need to shift the anchors.

Combining Arches.

You meet other Lady Kite Fliers and want to make a bigger arch together. After all isn't the whole greater than the sum of its parts?

Figure out the order. If you store your kites on a velcro band, find an end of your arch. Figure out if that is the end you want (odds are it isn't but the other end should be close by). Without removing or opening the velcro, larkshead one arch to another. Keep repeating this. Attach one end to the sand anchor (you will need more sand in the anchor). Open up the velcro band for the arch portion attached to the anchor. You might want one of the other arch owners hold the other attached arch bundles. Let out kites. Once you have reached the end of the first arch, wiggle the hand under the velcro band for the next batch of arches. Open the band and repeat until all of the arches are flying. Attach the end to the other sand anchor.

If you store your arch on a winder or someone else does. One person will let out the arch while another person carries the other arches on winders or in bundles. Once the arch is out, attach the next arch with a larks head. Two people makes this easier - one to hold the flying arch and the other to attach. Repeat until all of the kites and arches are out. Attach to the remaining anchor.

Taking Down the Arch.

In light winds you can pull the arch down. In any other winds you will have to use plan B or C.

Plan B. If the downwind area is clear of kites, people, obstacles, and waves you can do the following. Go to the upwind side (Arches usually have a little cup in them - the cupping side is the downwind side). Release the arch from the anchor. Let the arch fly out. It will settle on the ground. Start picking up from the detached end.

Plan C. There are obstacles or other hindrances to plan B. Walk the upwind anchor in the wind direction so eventually your arch will be aligned with the wind direction instead of across the wind. If you were flying a delta kite, the string leading to the kite would be in this direction. The kites will still be blowing on the ground, but if you keep stretched out (but not taut), they shouldn't tangle. Keep one end anchored and start winding. This is the best way if you use a kite winder, then you can start winding so the end you want start flying with will be wound last.

Acknowledgments:

The Arch pattern is adapted from the Fort Worden 20th year celebration arch pattern. Sam and Ann Huston distributed the pattern and wrote the directions.

Rob Pratt and Neal Parker for their ways of storing kites. To all of the other kite fliers and makers for their help in teaching me.